Referense 422009 | A3

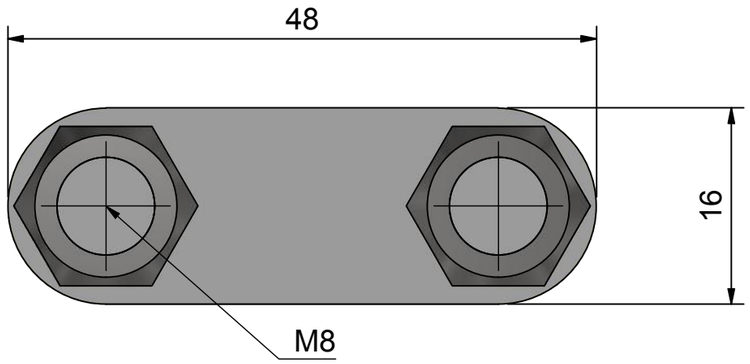


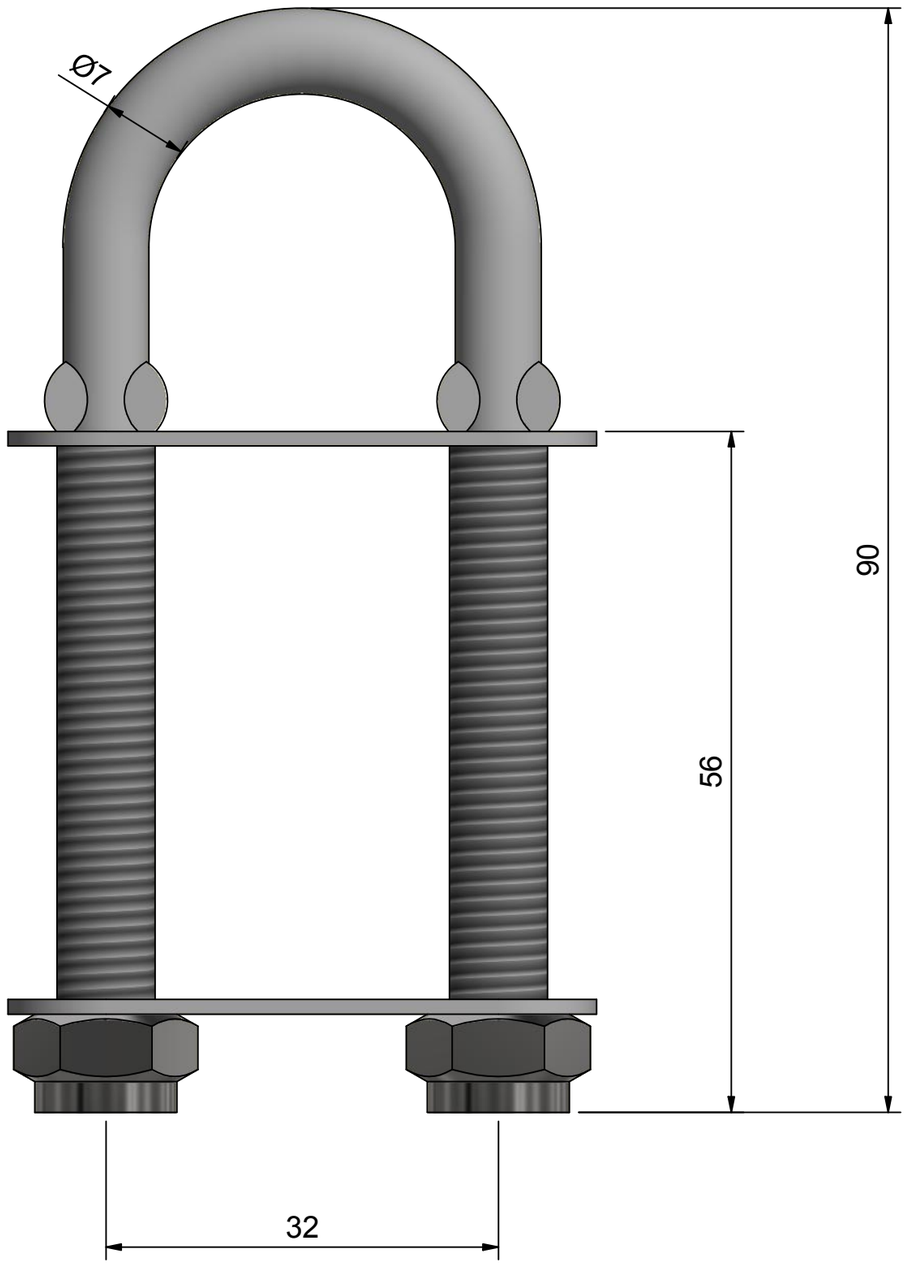


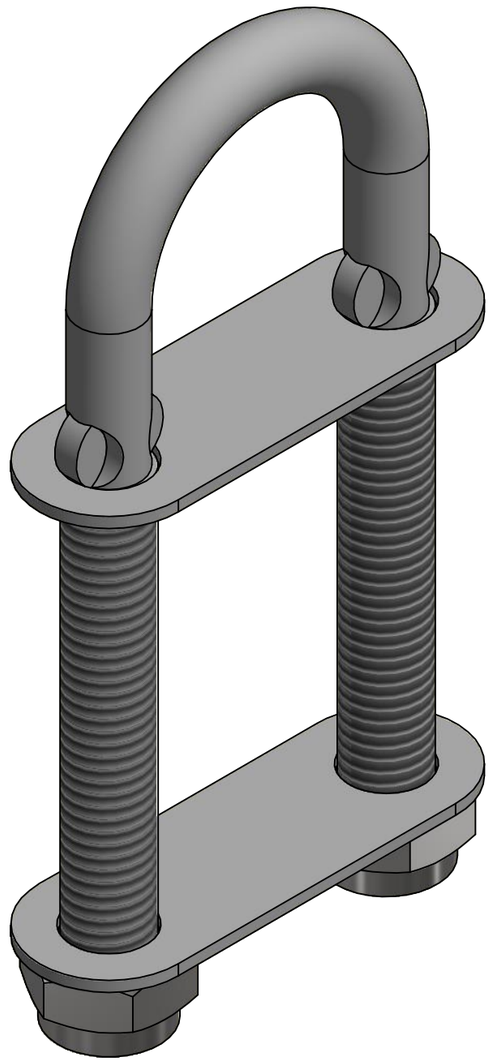

| | |
|---|---|
| AISI304/Electro polished | Date 190912/HH |
| Description **Bow eye - standard 90x32** | Item no. **422009** |