Referense 38-44 | A3

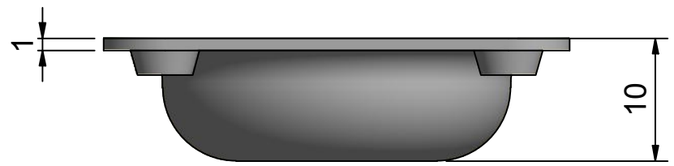

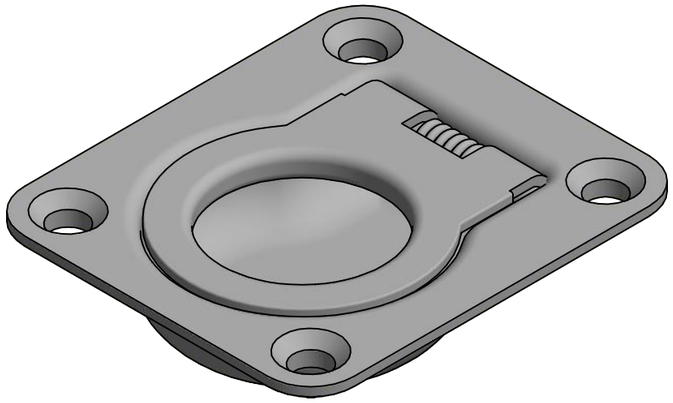

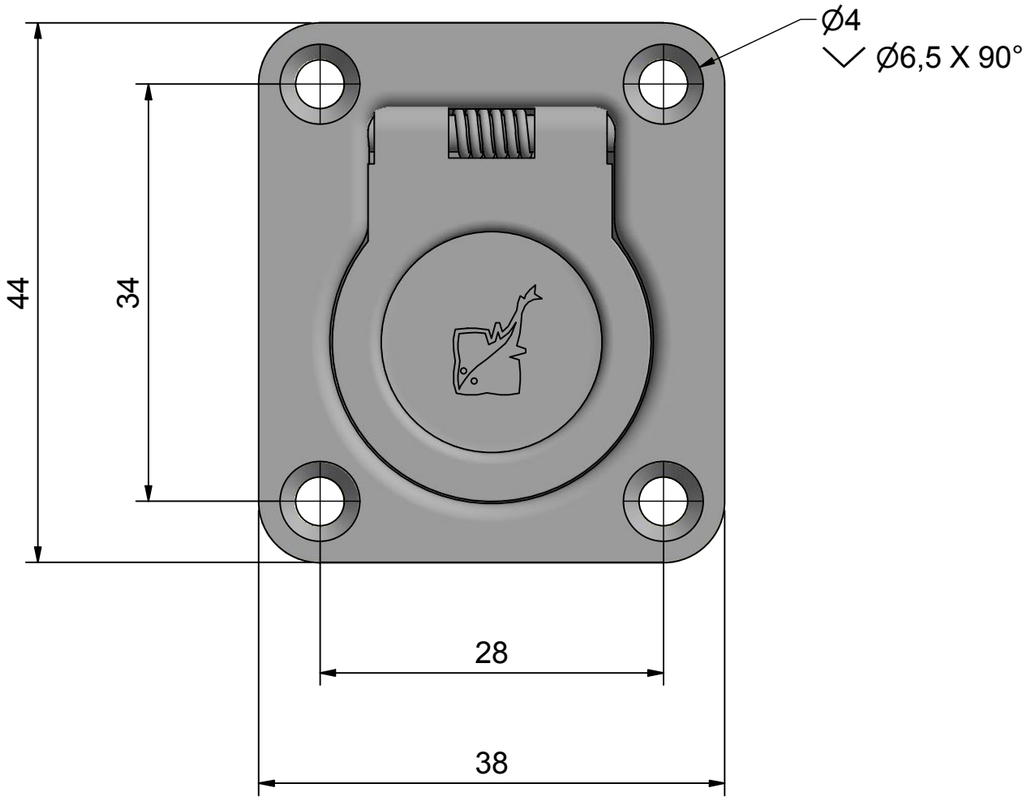

AISI304/Electro polished	Date 190911/HH
Description **Lift handle**	Item no. **421771**